CL004A

Height: 775	Tube ∅ : 25.4
Width: 475	Output @ 50°C△T: 169 W
Depth: 125	Electric element: 100 W

All dimensions in millimetres

Manufactured from ISO/CEN CuZn30As (BS CZ126) brass tube

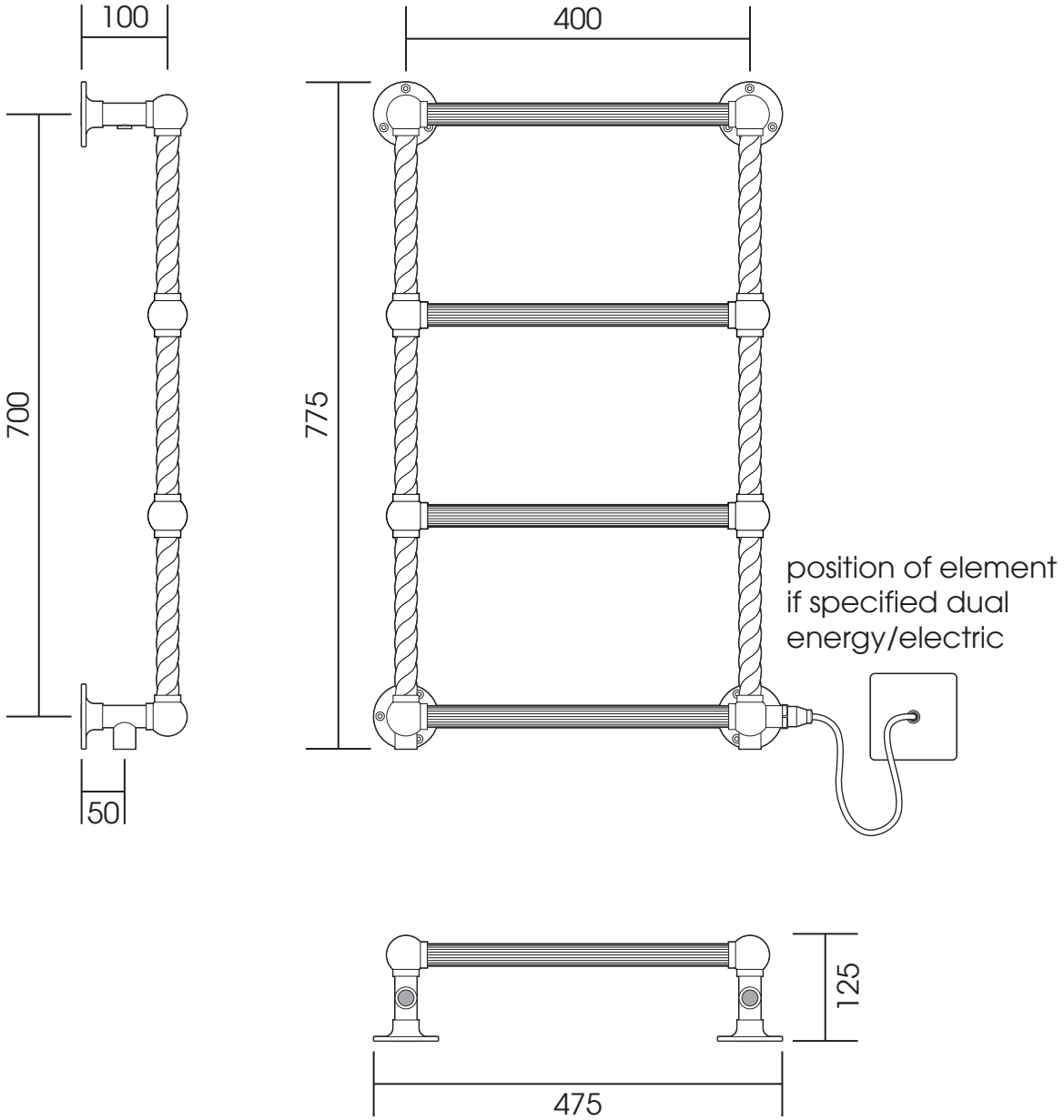

Vogue UK Ltd. reserve the right to alter specifications without prior notice.
All measurements given are nominal dimensions only.

SCALE 1:8

ISO 9001 CERTIFIED ORGANISATION
United Registrar of Systems Cert No. 1844
Vogue (UK) Ltd.

Units 6-10 Strawberry Lane Industrial Estate
Strawberry Lane
Willenhall
West Midlands WV13 3RS

Tel: 01902 387000
Fax: 01902 387001
e-mail:sales@vogueuk.co.uk
www.vogueuk.co.uk